MENOUFIA UNIVERSITY
Faculty of Engineering
Shebin El- Kom
Final Examination
Academic Year :2013-2014
Date : 16 / 6 /2014

Minufiya University

Dept.:Production Eng.& Mech. Design
Year : Diploma Level 500
Subject : Jigs & Fixtures
Code : PRE 510
Time Allowed : 3 Hours
Total Marks : 100

Tables & Charts are allowed.

Question No. 1 (30 Marks)

a- List the seven objectives of Jigs & Fixtures design .
b- What is the general function of locator pins ?
c- Remember the main design steps of Jigs & Fixtures.

Question No. 2 (30 Marks)

Sketch and describe the construction of three types of clamping devices and locators .

Question No. 3 (40 Marks)

The cast-iron Hand – connector shown in Fig. (1) is to be drilled and threaded in one setting . Design and sketch the type of fixture considered suitable for the operation .

Good Luck , Dr. GABER M. SHEHA .

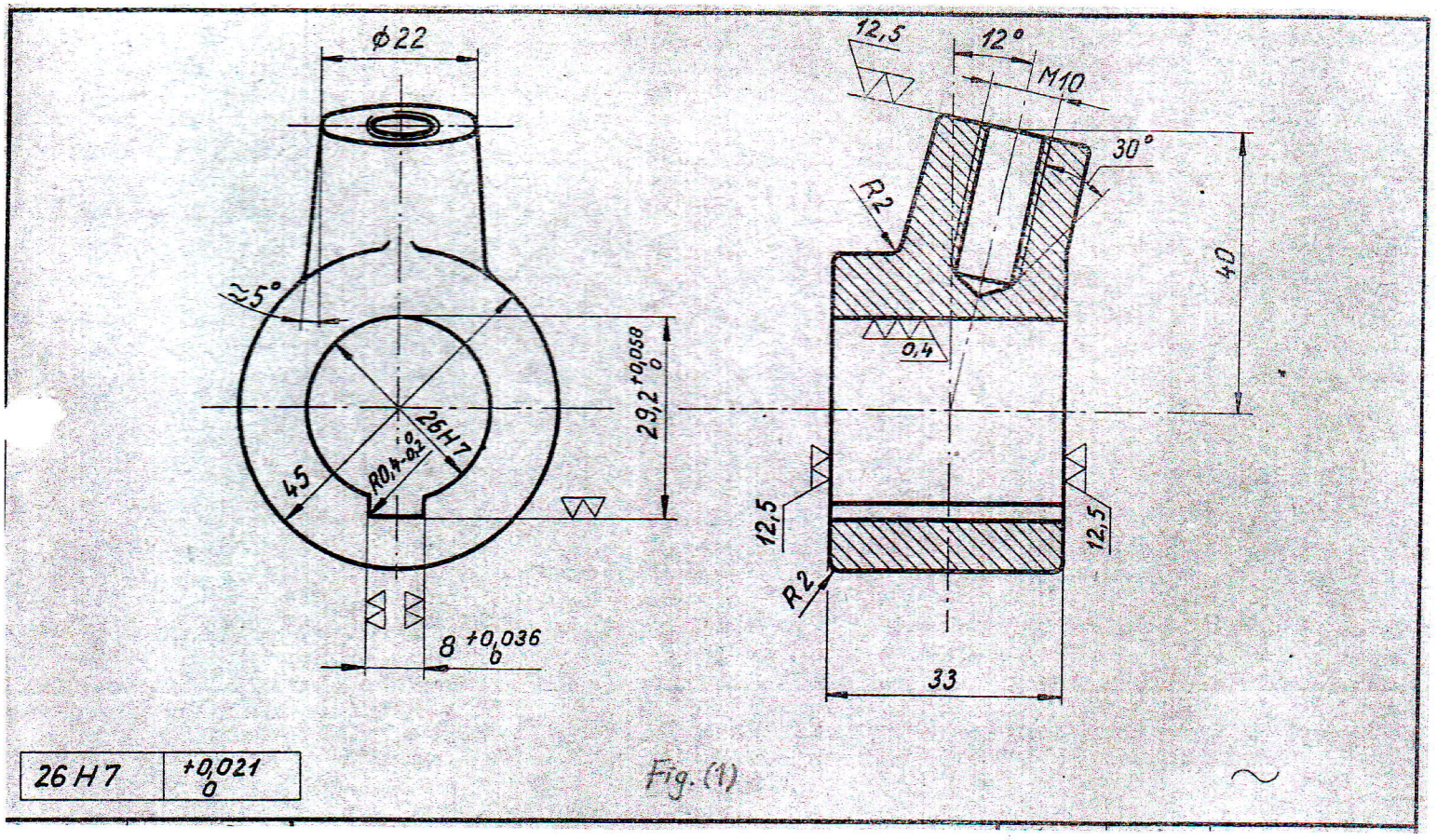

Fig. (1)